Diritti riservati All rights reserved

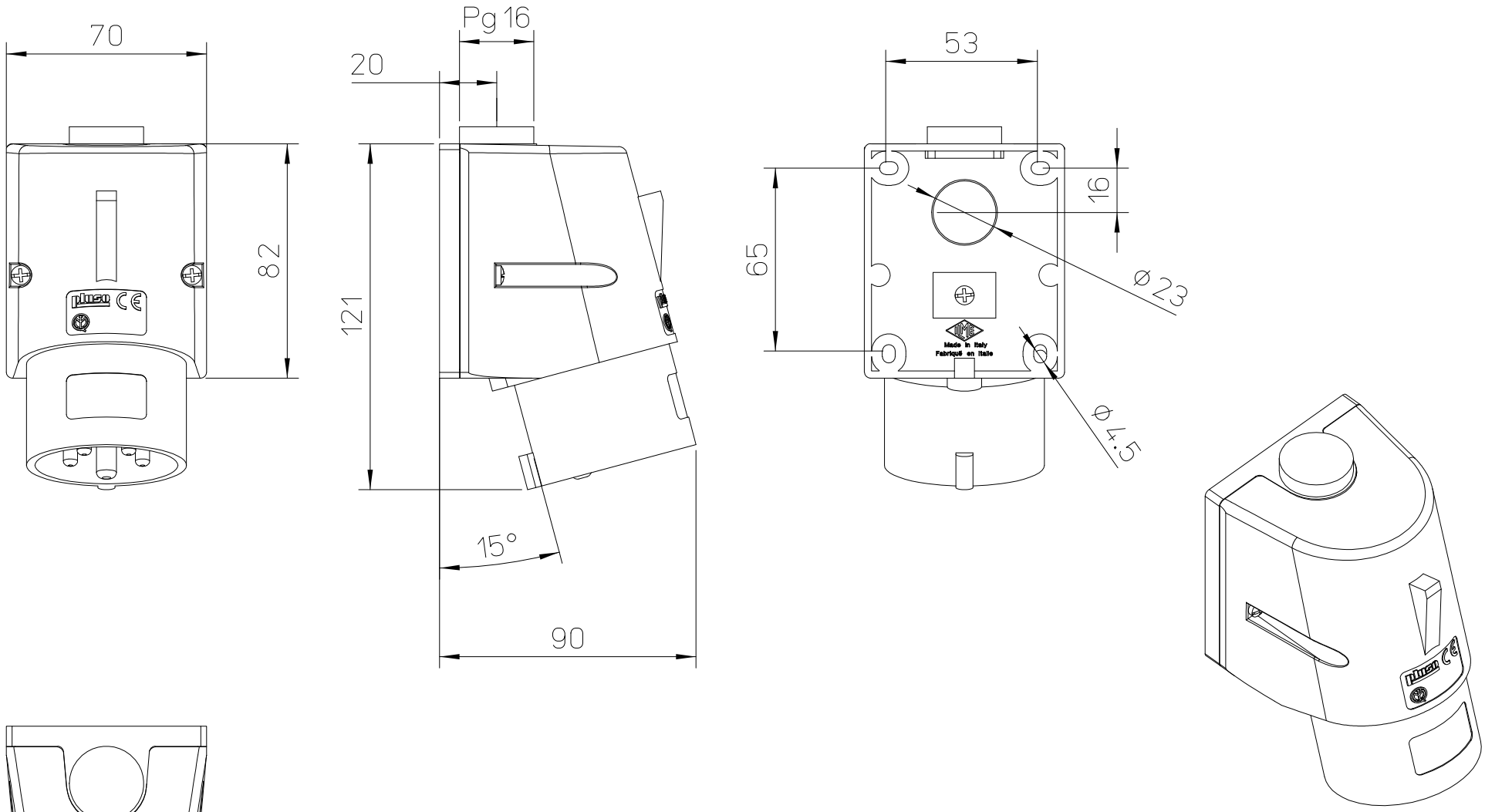

dimensions in mm	PE 1675 SM	Scale
Date 17/05/17	surface mounting housings, plugs, 3 poles + N + PE, 16A	1:2
Sign. C. Mainini		